Technical Update December 2025

XDS-TAN-01-003

9th December 2025

EirGrid

The Oval, 160 Shelbourne Road, Ballsbridge, Dublin D04 FW28
Telephone: +353 1 677 1700 | www.eirgrid.ie

Revision History						
Revision	**Date**	**Description**	**Originator**	**Reviewer**	**Checker**	**Approver**
R0	9/12/25	First Issue	Neil Cowap	Daniele Giustini David O'Brien Niall McMahon	Louise O'Flanagan	Neil Cowap

COPYRIGHT © EirGrid
All rights reserved. No part of this work may be modified or reproduced or copied in any form or by means - graphic, electronic or mechanical, including photocopying, recording, taping or information and retrieval system, or used for any purpose other than its designated purpose, without the written permission of EirGrid

Contents

1 Introduction 4

2 November 2025 Updates 4

2.1 Directive (EU) 2024/573 4

2.2 Implications of applying GIS specification (XDS-GFS-25-001-R5) to legacy building sizes 4

2.3 110 kV GIS Issues 4

2.4 Unavailability of Lapp post Insulators 5

2.5 Irish Fire Safety Regulations 6

2.6 Department of Transport Interim Guidance to Road Authorities 6

3 Future Items 7

3.1 Metering 7

3.2 AIS Circuit breakers 7

3.3 XDS-GFS-20-001-R2 Pre-commissioning Specification 9

3.4 XDS-GFS-38-001-R0 Labelling Spec Modification 9

3.5 Industry Workshop 9

3.6 Use of prefabricated walls for substation construction 9

1 Introduction

The purpose of this document is to inform industry of technical updates that may impact projects. It is intended to be used for information and not as an instruction to industry.

If there are questions arising from this document then please contact your relevant EirGrid project representative.

2 November 2025 Updates

2.1 Directive (EU) 2024/573

It is the responsibility of the designer to confirm compliance with Directive (EU) 2024/573.

XDS-GFS-25-001-R5 requires a derogation from EirGrid to use SF6 switchgear at 110 kV.

For the avoidance of doubt if a designer is using XDS-GFS-25-001-R4, it is their responsibility to ensure compliance with Directive (EU) 2024/573. Neither EirGrid, ESB or the EPA can grant a derogation to Directive (EU) 2024/573. It would add considerable time effort and complexity for a customer to apply for a derogation to put a 110 kV SF6 switchgear into operation on and after the 1st January 2028

2.2 Implications of applying GIS specification (XDS-GFS-25-001-R5) to legacy building sizes

Revision 5 of the GIS specification is not retrospective, but some projects are applying R5 which was released in April 2025.

In section 9.1 of the new specification we require *"Each gas compartment shall be capable of being fully evacuated within 60 mins by the provided gas equipment"* This can result in additional buffer zones and a larger GIS footprint, **which may require a larger building.**

We are updating the standard layouts to account for this at 220 kV and 110 kV.

The preference is to apply rev 5 and modify the building by installation of external stairs or similar.

Please contact EirGrid to discuss how this can be rectified on each project.

2.3 110 kV GIS Issues

For project in delivery phase where a GIS spec rev 4 was issued as part of the functional spec package, EirGrid suggest to procure, install and pre-commission a GIS switchgear adhering to the following requirements taken from XDS-GFS-25-001-R5:

- XDS-GFS-25-001-R5 Section 9.1.1.3 Digital Monitoring System needs to be adhered to. For the removal of doubt the requirement is for gas pressure **trending.** This is not a new requirement, but a clarification.
- XDS-GFS-25-001-R5 Section 14.1.3 Special tests shall be complied with making particular reference to item 1 the 200 hundred operations and item 3 the test voltages which are further clarified in figure 9

It is not a requirement for projects using XDS-GFS-25-001-R4, but it would be preferred to apply it.

It is a requirement for projects using XDS-GFS-25-001-R5

2.3.1 Capdis and Voltage Sensing

Several GIS switchgears have been delivered with the arrangement as per Figure 1, please note only the item in black on the left is required, to show voltage is present in the GIS switchgear. The EirGrid specification does not require numerical display of the voltage level. It has been assessed that it could be a disadvantage to have it for operations. EirGrid will require the numerical representation of the voltage to be removed.

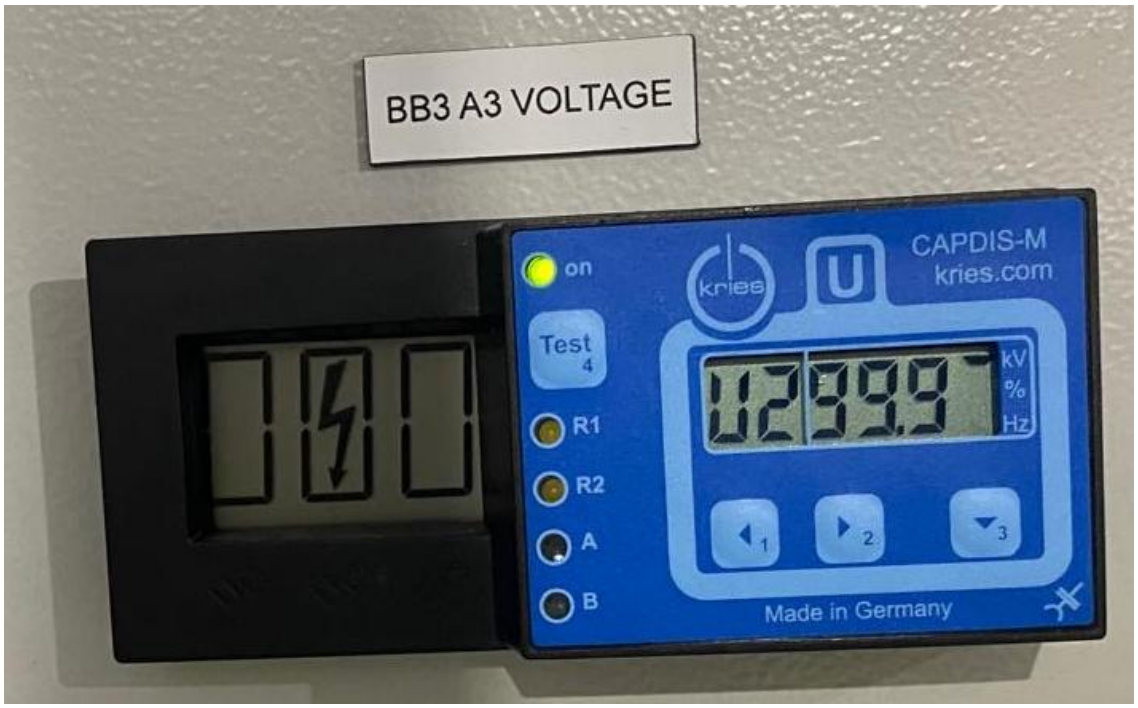

Figure 1 Capdis & Voltage sensing

2.4 Unavailability of Lapp post Insulators

A fire at the Lapp factory, resulted in a significant reduction in production capacity of post insulators. and therefore a constraint on supply of post insulators

When sourcing from other suppliers the function specification should be followed and the technical schedules completed, note the items below:

1. Submit a Technical Schedule showing compliance.
    a. look out for voltage withstand, creepage and mechanical withstands
2. The Creepage should be a minimum of 43.3 mm/kV as per section 3.1.4 of XDS-GFS-00-001-R4. Not the value in the post insulator spec XDS-HFS-04-001-R1.
3. Submit the Results of type and Routine testing
4. Submit a list of the countries that have supplied to Europe
5. Submit the results of the factory acceptance testing for the post insulators being delivered

2.5 Irish Fire Safety Regulations

Irish fire safety regulations regarding water supply are primarily governed by the Building Regulations (Part B) 2024 (S.I. No. 108/2024), which came into effect on May 1, 2025

See section "5.3.3.2.1 Buildings without an Internal Fire Main"

https://assets.gov.ie/static/documents/technical-guidance-document-b-2024-fire-safety-volume-1-buildings-other-than-dwelling-.pdf

This document from Mayo County council explains it well.

https://www.mayo.ie/getmedia/01bcd0fa-ada4-438f-b3fe-05849947eff5/Mayo-Fire-Authority-Fire-fighting-water-supply-requirements-V1.pdf

To summarise where there is no public water supply and the floor area of the development exceeds 1,000 sq.m to satisfy the building regulations there is a requirement to

1. Provide a static water tank, absolute minimum size for a tank is 45,000 litres OR
2. If there is an inexhaustible open water source i.e. river, canal, lake or pond

Tank should be easily accessible by a fire tender to reverse up and drop in a hard suction hose to refill the tender. Water level must also be maintained. There is usually a level alarm fitted to alert that the tank must be topped up.

There are some transitional arrangements outlined below, but it is the responsibility of the developers to ensure that the fire certificate is received for the development.

- A Planning Application must be submitted by 30 April 2025.
- A Fire Safety Certificate is granted by 30 April 2025.

2.6 Department of Transport Interim Guidance to Road Authorities

The Department of Transport issued an Interim Guidance to Road Authorities (placement of Medium or High Voltage electricity assets) in March 2025. This document sets out requirements on EirGrid, ESBN and any other party in the placement of cables in roads. These requirements proposed by the Department of Transport and are not currently in agreement with the specifications and standards provided by EirGrid and ESBN in respect of transmission or distribution networks. Despite extensive engagement with the roads sector to date, there remains differences between both standards.

EirGrid and ESBN have worked closely to prepare a Technical Assessment Report (TAR) for a standard 110kV joint bay but this has been rejected by RMO. EirGrid and ESBN are also aware that whilst DOT has issued the Interim Guidance, there remains inconsistent application of the guidance between different roads authorities. A Joint Electricity Transport Taskforce has been established, and the issue of the interim guidance requirements is a priority of the taskforce. We will continue to keep industry involved of the developments.

3 Future Items

3.1 Metering

A clarification note on Metering is being prepared for issue to industry in relation to Medium Voltage Sub-Metering Requirements.

3.2 AIS Circuit breakers

EirGrid are updating specification XDS-GFS-36-001 110 / 220 / 400 kV Air Insulated Circuit Breakers. To comply with the EU Directive 2024/573. To summarise, it is the responsibility of the contestable designer to comply with EU Directive 2024/573, but the new specification will look for a derogation to install an SF6 circuit breaker at 110 kV. The following circuit breakers are likely to be acceptable:

3.2.1 SIEMENS - 3AV1FG

Clean Air CB – To date none have been installed on the Irish system, a trial is occurring Q2 2026

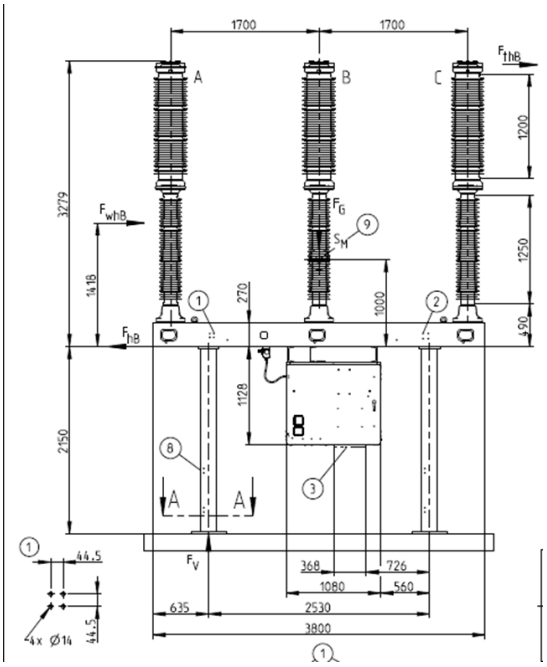

Figure 2 SIEMENS - 3AV1FG Clean Air CB

3.2.2 Hitachi - LTA 145D1

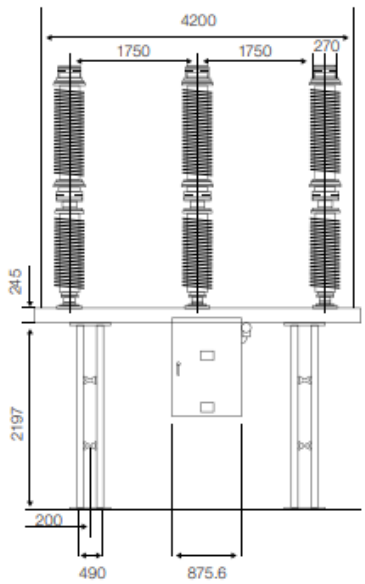

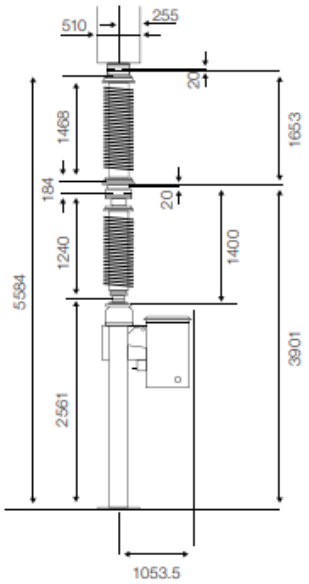

LTA circuit-breaker

Type		LTA 145D1
Voltage	kV	145
Current	A	3150
Breaking current	kA	40
Frequency	Hz	50
Ambient temperature	°C	-50 ... +50
Operation		Three-pole

3.2.3 GE - GL311c or GL312c

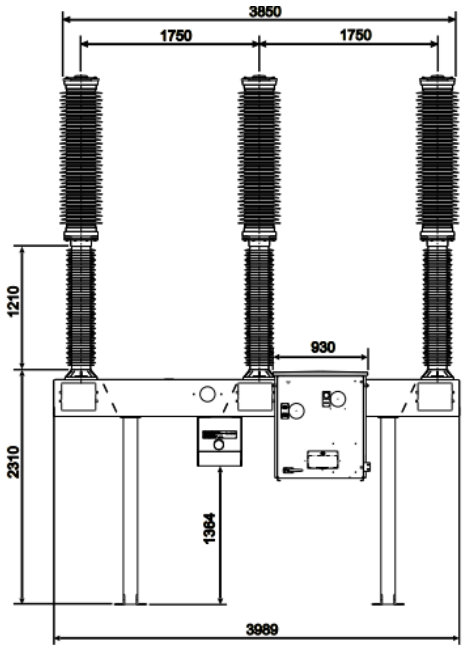

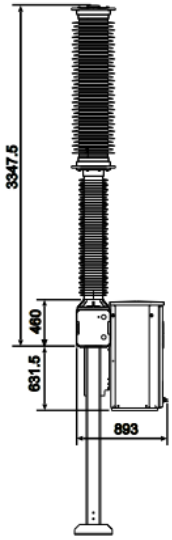

Dimensions (mm)	GL309c	GL310c	GL311c	GL312c
Voltage Level	72.5 kV	100 kV	123 kV	145 kV
Phase Distance	1050/1300	1300/1750	1300/1750	1750*
Column Height	710	1210	1210	1210

The following should be noted for all non SF6 circuit breakers

1. No non SF6 AIS circuit breakers have been installed in Ireland, at transmission level. **Contact your EirGrid representative as early as possible if you intend to do so.**
2. See the Excerpt below from the GIS specification in relation to the DC Time constant, this is a requirement. EirGrid have confirmed with OEM's, this is available.

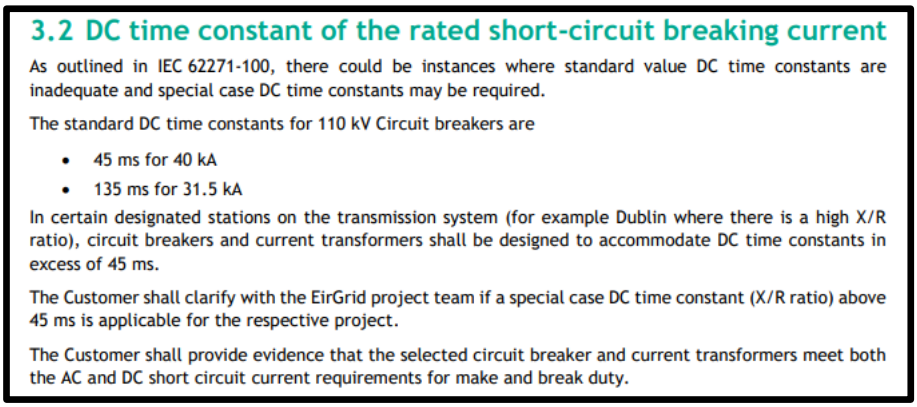

3.2 DC time constant of the rated short-circuit breaking current

As outlined in IEC 62271-100, there could be instances where standard value DC time constants are inadequate and special case DC time constants may be required.

The standard DC time constants for 110 kV Circuit breakers are

- 45 ms for 40 kA
- 135 ms for 31.5 kA

In certain designated stations on the transmission system (for example Dublin where there is a high X/R ratio), circuit breakers and current transformers shall be designed to accommodate DC time constants in excess of 45 ms.

The Customer shall clarify with the EirGrid project team if a special case DC time constant (X/R ratio) above 45 ms is applicable for the respective project.

The Customer shall provide evidence that the selected circuit breaker and current transformers meet both the AC and DC short circuit current requirements for make and break duty.

Figure 3 Excerpt from the GIS Spec for the circuit breaker

3. If **POW (Point on Wave)** operation is a project requirement, then SF6 circuit breakers might not be able to be used on the project and a SF6 breaker might need to be installed.

3.3 XDS-GFS-20-001-R2 Pre-commissioning Specification

An interim update to the pre-commissioning specification will be issued in to clarify the earth grid testing requirements.

It is intended to have a workshop with industry in the new year to discuss a further revision to this specification.

3.4 XDS-GFS-38-001-R0 Labelling Spec Modification

It is intended to update the XDS-GFS-038-001-R0 with an interim update to clarify the busbar labelling issues.

In Q1 of 2026 it is intended to take all the lessons learnt from several projects and revise the specification again to remove ambiguity and to correct issues where they are highlighted.

3.5 Industry Workshop

In the first quarter of 2026 it is intended to have the following face to face interactions with industry

- A dedicated workshop on the pre-commissioning specification
- A wider industry workshop to discuss other standards and specification related items

3.6 Use of prefabricated walls for substation construction

EirGrid/ESB are investigating a revision to the civil specification to allow the use of prefabricated walls in lieu of concrete block walls in both AIS and GIS substations.

The intent of this is to improve the deliverability of substations and to reduce construction times.

At the industry workshop in Q1 2026 we would appreciate feedback from industry on this possible change to the specification.