Phase A & B testing

Oisin Goulding
Operational Services and Performance Team
August 29th 2012

Testing Overview

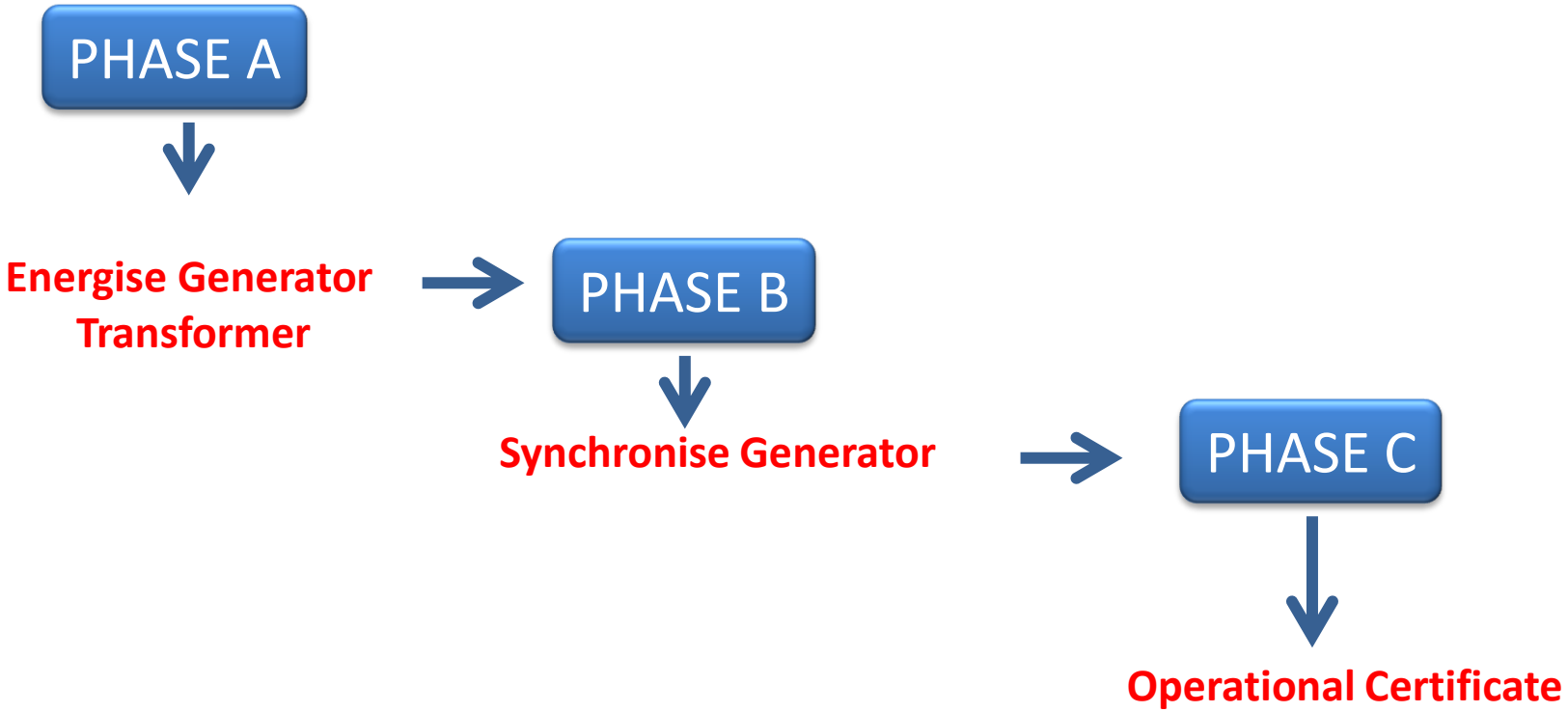

Phase A applies to :



"Green field" sites



Refurbishments

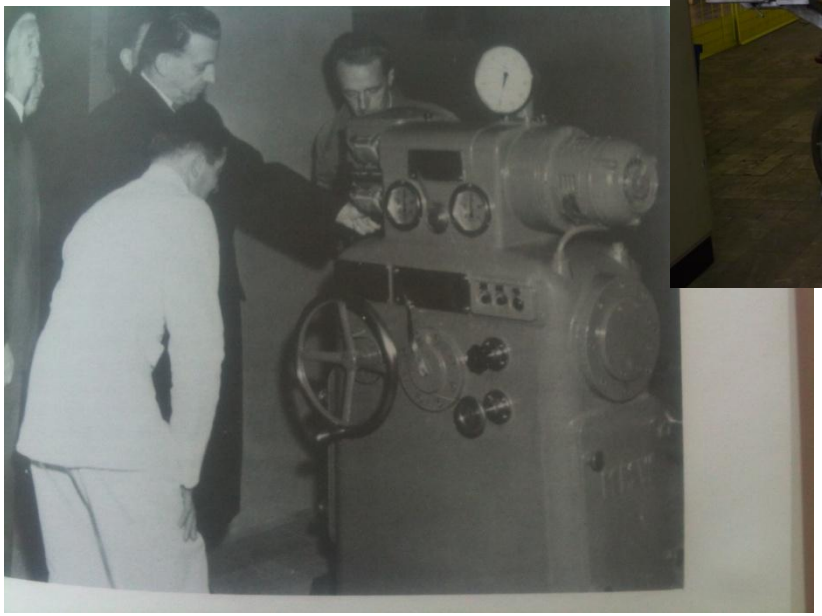

Tests 1 to 7

- Data gathering on the project

- Key items
  - Dynamic Studies FRT, PSS etc
  - Generator parameters
  - Protection settings
  - Transformer data

Start of Phase A

Step 1

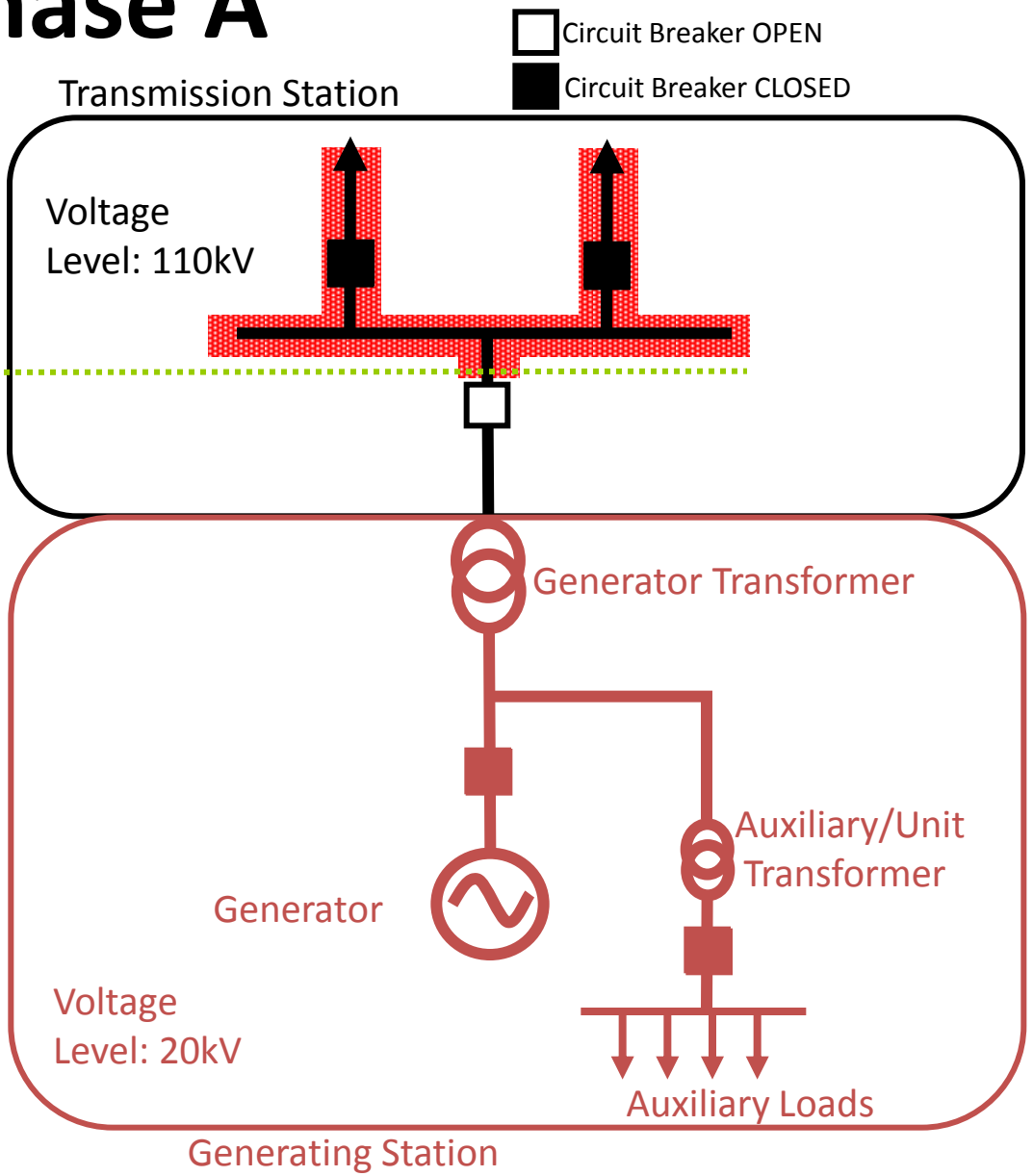


105/20t

Tests 8 to 12

- Interfaces, Inter locking, Inter tripping, Earthing and Lightning protection
  - End to end checks of wiring for signals and controls
  - Testing of Earth Grids and connections between transmission and generation stations

Tests 13 to 16

- Factory and Site testing of Voltage and Current transformers

Tests 17 and 18

- Function and Accuracy checks of protection and signalling



Tests 19 and 25

- Review of transformer protection
- Oil test generator and unit transformer
  - (moisture and breakdown)



Tests 20 and 28

- Inspection of procedures
  - In case of tripping of transformer
  - Operation of protection

- Preparation of Operating Instruction
  - Generator, EirGrid (PSOP), ESB Networks

Test 21

- Suitable MV isolation points before energisation of the Generator transformer
  - Check that suitable earthing facilities are available for the equipment on the other side of the isolating points.
  - Visual check of earth switch and isolators



Test 22

- Check, calibration and sealing of Transmission Station metering including signals to Power Station.
  - Performed by ESB telecoms
  - Required before the unit can go live in the SEM or energise

Tests 23, 24 and 26

- Insulation resistance check of all equipment to be energised
  - Transformer (generator and unit)
  - Switch gear

Tests 27,29, 30, 31 and 32

- Agreement of the Energisation Instruction (EI)
  - Generator, EirGrid (PSOP), ESB Networks
- Site walk around prior to energisation
- Provision of Declaration of Fitness to NCC
  - Covering all customer plant to be energised under the EI
  - Pre-Approval of DoF providers
- Energise as per the Energisation Instruction

End of Phase A

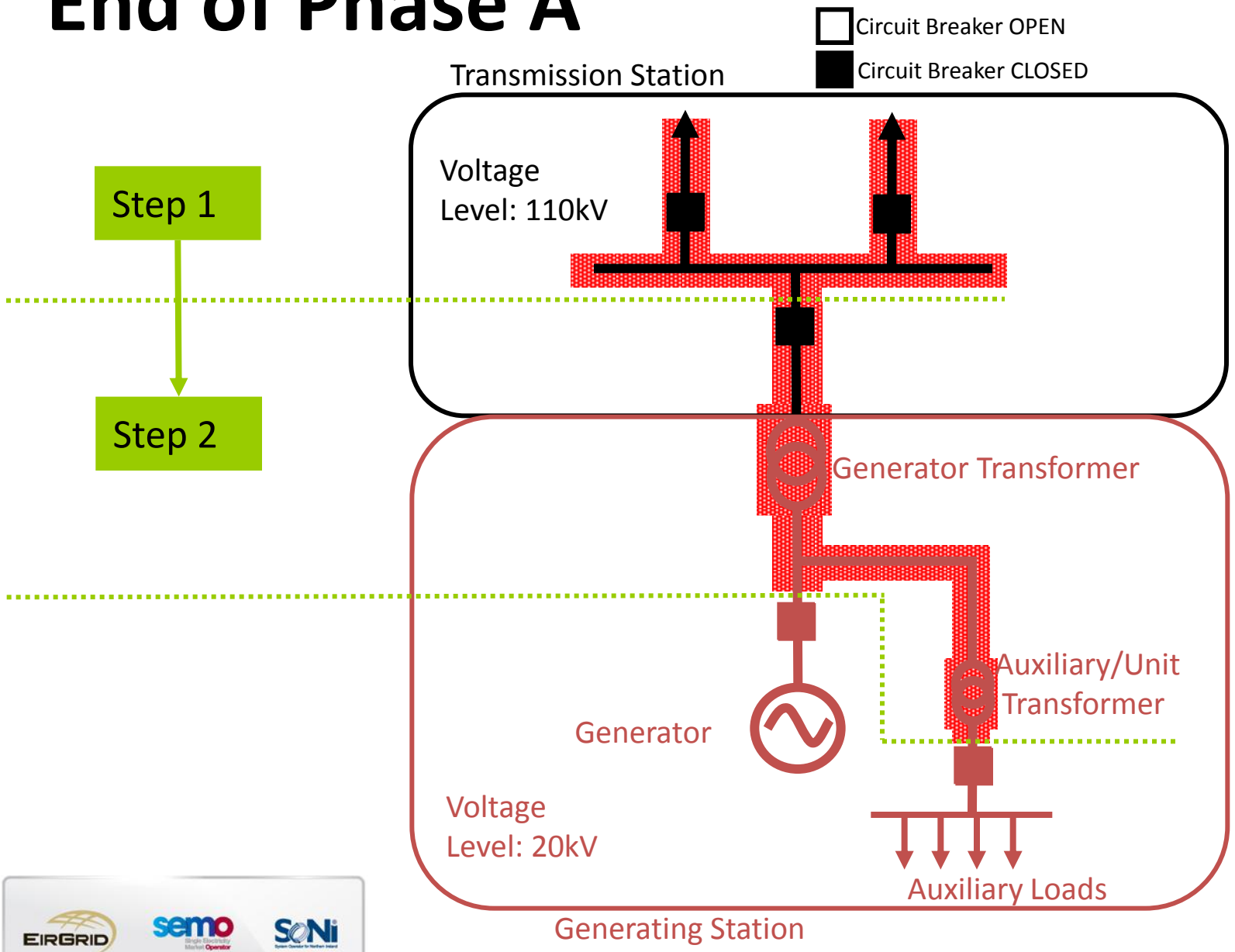

Phase B Tests

- Grid Code Compliance Tests 32 to 44
  - Offline checks of the control systems
    - E.g. AVR, Governor, Synchroniser
  - Testing of switchgear/equipment prior to energisation of Generator

Phase B Tests

- Test 32
  - Insulation resistance test of switchgear, generator CB to generator and generator stator.

- Test 33
  - Insert any flexibles, test resistance of connections.

Phase B Tests

- Test 34
  - Function and accuracy check of protection (including secondary cabling):
    - Generator
    - Generator transformer
    - Unit transformer
    - Transmission station and lines

Note that some or all of these tests may already have been completed as Item 17 of Phase A tests.

Phase B Tests

- Test 12A
  - Check operation and interlocking for HV CB, HV disconnect, HV ES, Generator CB, Generator disconnect, Generator CB ES, MV CB, MV ES
  - Test that trip signals from Transmission side trip the relevant CB's.

This test accounts for any switchgear etc that was not fully commissioned during phase A (may have been completed in Phase A test 12.

Phase B Tests

- Test 35
  - Function check of all Transmission Station trip commands and signals and alarms/recording:
  - Check of all signals to SCADA system.
  - Check Power Station emergency tripping of HV CB and associated signal.

Note that some or all of these tests may have been completed as Item 18 of Phase A tests.

Phase B Tests

- Test 36, 37, 38
  - Testing of excitation system
  - Functional checks (AVR response, failovers etc)
  - Open and short circuit characteristics
    - Testing if protection and signal transmitters by primary injection

Witnessed test – report required

Phase B Tests

- Test 39
  - Turbine overspeed test

- Test 40
  - Testing of Governor system - Functional checks
    - Response to step changes, failovers etc.

Witnessed test – report required

Phase B Tests

- Test 41 (& 42)
  - Testing of synchroniser - Generator Circuit Breaker
  - Testing of synchroniser - HV Circuit Breaker

Witnessed test – report required

Phase B Tests

- Test 43
  - Pre-Synch Energisation Instruction
    - DoF from Generator to NCC covering
      - Generator and protection
      - Synchroniser
      - Any new switch gear to be energised
- Test 44
  - Synchronise generator

End of Phase B

